MESON AB

SELF CLOSING VALVE

357321

PN 10

No	Part	Material
1	Body	Bronze Rg5
2	Locking nut	Bronze Rg5
3	Stem	Brass CuZn39Pb3
4	Disc	Brass CuZn39Pb3
5	Ball	Brass CuZn39Pb3
6	Spring	Spring steel, galvanized
7	O-ring	NBR
8		
9		
10		

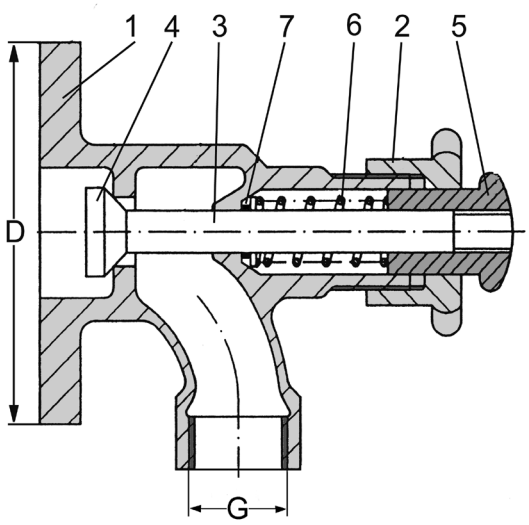

Variants:
With drainpipe
Threaded connection in steel or Stainless steel

DN	G	D	n	Hcd	d		Max working-pressure		Weight Kg
							Mpa 80 °C		
20	1”	105	4	75	14		1,0		2,4
25	1”	115	4	85	14		1,0		2,4