MESON AB

FIRE VALVE

355822

PN 16

No	Part	Material
1	Body	Bronze Rg5
2	Disc ring	EPDM
3	Disc	Special brass
4	Stem	Special brass
5	Bonnet	Special brass
6	Glandpacking	Klinger 200
7	Handwheel	Cast iron
8		
9		
10		

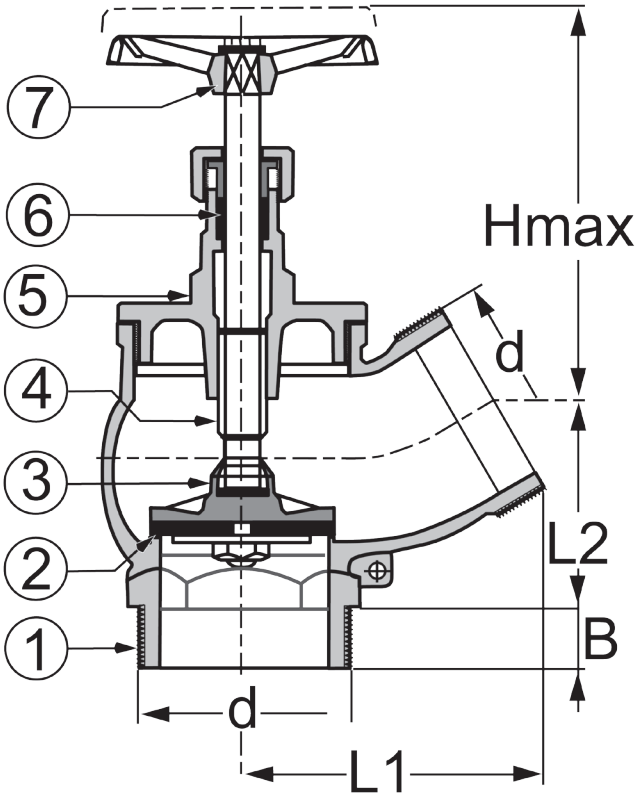

Variants:
With coupling

Other dimensions/materials on request

DN	d	D	L1	L3	B	Hmax	Max working-pressure		Weight Kg
							Mpa 90 ºC		
50	2”	165	100	75	19	150	1,6		5,1
65	2 1/2”	185	110	87	21	165	1,6		7,0